Bulletin of Electrical Engineering and Informatics
Vol. 13, No. 3, June 2024, pp. 1453~1464
ISSN: 2302-9285, DOI: 10.11591/eei.v13i3.6416

The effectiveness of a hybrid MPPT controller based on an artificial neural network and fuzzy logic in low-light conditions

Louki Hichem[1], Merabet Leila[2], Omeiri Amar[1]
[1]Electrical Laboratory of Annaba, Faculty of Technology, Badji Mokhtar-Annaba University, Annaba, Algeria
[2]Electromecanical Systems Laboratory, Faculty of Technology, Badji Mokhtar-Annaba University, Annaba, Algeria

Article Info

Article history:

Received Apr 6, 2023
Revised Aug 30, 2023
Accepted Oct 12, 2023

Keywords:

Boost converter
Fuzzy logic technique
Hybrid strategie artificial neural network-fuzzy
Maximum power point tracking
Perturb and observe method
Photovoltaic panel
Solar energy

ABSTRACT

Technological advancement and economic progress have made power consumption a big issue. Concern is growing as traditional energy sources dwindle. In the future, numerous fossil fuels will be insufficient to satisfy human requirements. This motivates research into the feasibility of using renewable energy sources. Renewable energy sources offer a multitude of advantages, including their cost-effectiveness, lack of environmental impact, and sustainable nature. Sunlight is currently the most prevalent source of energy because it is both free and readily accessible. Consequently, photovoltaic (PV) energy is gaining importance in the field of electricity generation. Tracking the maximum power point (MPP) in a solar PV system is challenging due to varying meteorological conditions (irradiance and temperature). To maximise the efficiency of a solar power installation, it is essential to monitor the PV array's optimum power point. This analysis compares the perturb and observe (P&O), fuzzy logic (FL), and suggested artificial neural network (ANN)-fuzzy strategy for determining the MPP of a PV system with minimal radiation exposure. Simulation results show that at low irradiation levels, the proposed ANN-fuzzy maximum power point tracking (MPPT) unit controller is superior to the FL and P&O MPPT controllers in terms of tracking maximum power.

Corresponding Author:

Louki Hichem
Electrical Laboratory of Annaba, Faculty of Technology, Badji Mokhtar-Annaba University
B.P 12, Annaba 23000, Algeria
Email: hichem.louki@univ-annaba.org

1. INTRODUCTION

The insufficiency of fossil fuels (oil, natural gas, and coal) and their harmful consequences for the environment are the main subjects that worry humanity at this time. Despite all of these concerns, one promising solution looms on the horizon: the harnessing of renewable energy sources. These resources are advantageous because they are inexhaustible, non-polluting, and freely available in nature. In this regard, governments and authorities in countries have increased their interest in renewable energy to meet the growing global energy needs. Scientists and researchers have also directed their attention and efforts to this important area of research. Therefore, an optimisation of the cost of production of electrical energy based on the exploitation of renewable energy sources will take place, as well as an improvement in its quality. Photovoltaic (PV) solar energy is one of the renewable energies that can be strongly exploited in order to satisfy energy demands on the one hand and reduce the use of fossil fuels on the other [1]. In particular, this type of energy has undergone a considerable evolution in recent years, which has resulted in cheaper solar panel production, which in turn has led to a reduction in the overall cost of the PV conversion chain. This is reflected in the rapid growth of PV installations worldwide each year [2].

Irradiation and temperature are two factors that affect the power produced by a PV array. These meteorological circumstances vary in an unpredictable way during the day. This causes changes in the MPP point. When the operating point of a photovoltaic generator (GPV) is far from the maximum power point (MPP), considerable power losses will be caused [3]. On the other hand, the analysis of various behaviours of a PV generator confirms that it is rarely compatible with its load without the need for an adaptation stage [4]. Therefore, the adaptation stage, also known as the maximum power point tracking (MPPT) unit of a GPV, is an indispensable element in a PV system. In general, an adaptation stage consists of one or more static converters, and their main role is to convert the continuous electrical quantities into quantities adapted to the load. This device can be controlled by one or more control strategies called the "MPPT algorithm", whose purpose is to maximise the power that can be provided by a PV generator regardless of weather conditions for solar irradiance and temperature [5].

Indeed, this command is used to force the GPV to operate at the optimal points of its characteristics without any prior knowledge of these points or knowing when they change, because the variation of the MPP is unpredictable and depends mainly on climatic fluctuations in irradiation and temperature. The situation becomes more complicated because between MPP, irradiance, and temperature there is a non-linear relationship [6]. To accomplish this task, the most common MPPT control techniques consist of automatically adjusting the duty cycle to place the PV generator at its maximum value regardless of fluctuating atmospheric circumstances that may occur at any time [7]. In other words, the MPP can be reached with an adequate match between the PV generator and the load [8]. In this regard, several researchers and scientists focus their efforts on the study and improvement of MPPT algorithms to get the most power out of a GPV in any meteorological circumstance, especially during sudden changes in solar irradiance and temperature [9].

Several more or less efficient MPPT control methods, depending on their operating principle and complexity, appear regularly in the literature [10]–[14]. The methods differ according to their complexity, number of sensors required, digital or analogue implementation, speed of response time, tracking capacity, and efficiency. In addition, the type of application can have a significant effect on the selection of the MPPT algorithm. Slamet *et al.* [15] present a novel MPPT control technique that offers resilience against direct current (DC) link voltage disturbances while ensuring effective tracking capabilities. The proposed methodology employs an indirect MPPT control topology that integrates two distinct controllers. The adaptive proportional integral (PI) control, employed as the external controller, is dynamically adjusted in real-time through the utilisation of fuzzy logic (FL). Fuzzy-based MPPT is the topic of the research in [16], which analyses the use of a field-programmable gate array (FPGA) chip to apply the approach in a multi-channel PV system. The study conducted by Rout *et al.* [17] investigates the influence of various MPPT algorithms on the improvement of PV system efficiency by means of adjusting the duty ratio of the power interface. Additionally, it aims to elucidate the reasons behind the preference for the fuzzy logic control (FLC) technique over alternative algorithms. According to Toumi *et al.* [18], the tracker utilising the FL technique exhibits enhanced performance in terms of both speed and precision when tracking the MPP in comparison to the perturb and observe (P&O) algorithm. Ibnelouad *et al.* [19] describe a hybrid soft-computing approach to the implementation of intelligent MPPT methods in a PV system that can adjust to a wide range of possible operating situations. This technique combines neural networks with FL (neuro-fuzzy) techniques. Seven MPPT methods are compared in [20]. The techniques under investigation include classical methods, artificial intelligence (AI) approaches, and bio-inspired algorithms. The classical methods encompass P&O, modified perturb and observe (M-P&O), and incremental conductance (INC). The AI techniques consist of a FLC, an artificial neural network (ANN), and an adaptive neuro-fuzzy inference system (ANFIS). Lastly, the bio-inspired algorithm being examined is cuckoo search (CS). This comparison is conducted to evaluate these techniques based on various criteria, such as efficiencies, tracking response, implementation cost, and other relevant factors, assuming identical climatic conditions. The benefits of utilising a FLC in comparison to the P&O technique are discussed in [21]. Both FLC and ANFIS-based MPPTs are evaluated with regard to their steady-state performance as well as their effect on the dynamic behaviour of the PV system by [22]. In their study, Azmi *et al.* [23] present a comprehensive analysis of an intelligent approach aimed at effectively monitoring the optimal power point on a standalone PV system. This technique leverages FLC to accurately track the highest power point, even in the presence of varying temperature and irradiance conditions.

Low sun irradiation is common during the rainy season across the world, but notably in tropical places. Moreover, specialised PV applications must function well even in low solar radiation conditions. For these special environmental conditions, MPPT algorithms may not be able to distinguish minute variations in voltage and current. Nevertheless, there has not been much study on how well MPPT algorithms perform in dimly illuminated environments [24].

The proposed methodology incorporates a hybrid ANN and FL approach, which consists of a multi-layered feed-forward ANN and an inference-based table for the FLC. The ANN comprises three distinct levels of structure, namely the input, hidden, and output layers. The purpose of this neural network is to facilitate the

controller's navigation towards the particular location where the MPP is situated. Following this, the use of FL alongside rule inference is initiated to enhance the performance of the PV system by effectively identifying and sustaining the peak power point (MPP). The primary aim of the hybrid model, referred to as the ANN-fuzzy approach, is to simplify the complexity of PV solar systems and enhance the efficiency of power extraction within a minimal timeframe, while also ensuring applicability and effectiveness across various weather conditions. This research endeavours to examine and contrast the behavioural patterns and responses of strategies derived from the P&O algorithm, the FL approach, and the proposed ANN-fuzzy hybrid technique.

This paper is structured as follows: section 2 discusses the methods of MPPT, including P&O, which is a classical MPPT method widely used in the literature, FL, and the suggested ANN-fuzzy strategies. Section 3 presents the results and discussion, which describes the detailed simulation results comparing the novel approach with single FL and the P&O technique. The conclusion of this study is presented in section 4.

2. METHODS OF MAXIMUM POWER POINT TRACKING

The implementation of real-time MPPT is of utmost importance in PV systems, as it addresses the inherent variability in the maximum power output of solar arrays caused by fluctuations in weather conditions. Continuously monitoring and optimising the PV system's MPP in response to changing external conditions like sun irradiation and temperature is the principal purpose of a MPPT controller. The purpose of this command is to automatically modify the duty cycle in order to achieve the MPP. Various MPPT techniques have been developed in scientific research to effectively tackle these challenges. The evaluation criteria employed by the researchers encompass accuracy, efficiency, reaction time, overshoot during the transitory phase, fluctuations in steady-state power output near the MPP, and cost. The several MPPT methods are evaluated by these criteria [13].

2.1. Perturb and observe technique

The P&O technique is widely favoured for its straightforwardness and ease of implementation. The objective is to introduce disturbances to the system and subsequently analyse the system's response. In this particular scenario, altering the duty cycle will result in a modification of the voltage generated by the solar panel. Consequently, the power generated by the solar panel at time k is quantified and compared to the power generated at the previous time point (k-1). As the power level increases, the variation in duty cycle remains consistent, causing the system to converge on its MPP. As the power declines, so does the MPP, requiring an inversion of the duty cycle. Figure 1 shows the P&O algorithm diagram [25].

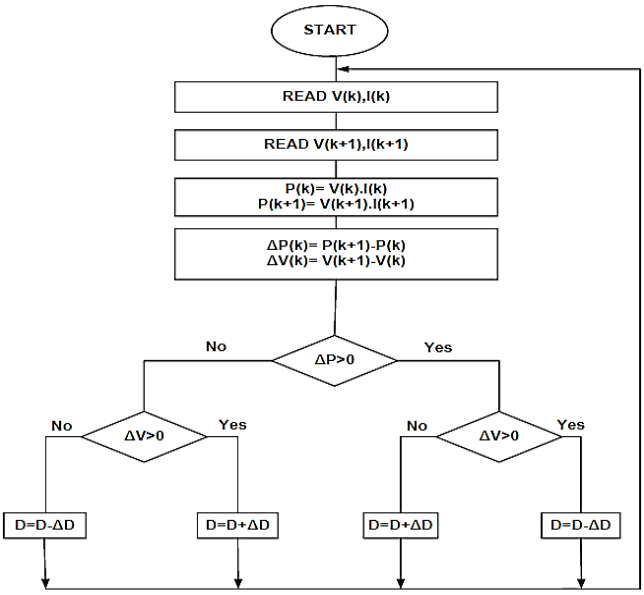

Figure 1. P&O technique flowchart

2.2. The fuzzy logic approach

FL is among the most efficient MPPT optimisation techniques. Several investigations, including [15]–[23], have utilised FL to achieve the MPP. As demonstrated previously, climate (temperature, sun

irradiation) has a significant impact on the nonlinear I-V and P-V features. FL control has multiple advantages. Non-linearity and imprecise inputs can be handled without the need for precision mathematical modelling. However, FL controller design requires preexisting information [26].

As a monitoring tool, FL controls the PV system's MPP. It is employed to enhance the efficiency of the traditional MPPT methods P&O and IC or in tandem with AI-based techniques like ANNs and GAs to achieve the desired results. P&O and IC are two conventional MPPT techniques that use fixed step sizes. However, these approaches possess notable limitations, such as sluggish convergence, oscillations near the MPP, and an inability to effectively track the MPP when there are sudden variations in atmospheric conditions, such as changes in irradiation and temperature.

Increasing the magnitude of step sizes enables a more rapid response, although it is unavoidable that excessive oscillations will occur during steady-state. Conversely, the occurrence of oscillations can be mitigated through the implementation of a reduced step size coupled with a sluggish response time. The selection of the step size should aim to strike a suitable balance between dynamics and oscillations, taking into account the specific operational conditions such as irradiation and temperature [13]. The variable step size offered by the FLC will be utilised to address these challenges. The determination of the step size will be based on the membership functions and inference rules, which have demonstrated enhanced system effectiveness in both permanent and transitory phases through their ability to adapt to varying climate conditions. Three basic phases may be identified as the foundation of the FLC: fuzzification, inference rules, and defuzzification. The FL controller under consideration comprises two inputs, a single output, and a collection of 25 rules, as illustrated in Table 1. The overall layout of a PV system that makes use of the FL MPPT method is seen in Figure 2. The variable E and CE are defined as the inputs of the FLC; they are computed using (1) and (2):

$$E(k) = V(k) - V_{mpp} \tag{1}$$

$$CE(k) = E(k-1) - E(k) \tag{2}$$

Table 1. The FL controller's 25 rules

CE \ E	NB	NS	Z	PS	PB
NB	Z	Z	Z	B	M
NS	Z	Z	S	M	B
Z	Z	S	M	B	VB
PS	S	M	B	VB	VB
PB	M	B	VB	VB	VB

*NB is for negative big; NS stands for negative small; Z stands for zero; PS stands for positive small; PB stands for positive big; S stands for small; M stands for medium; B stands for big; and VB stands for very big

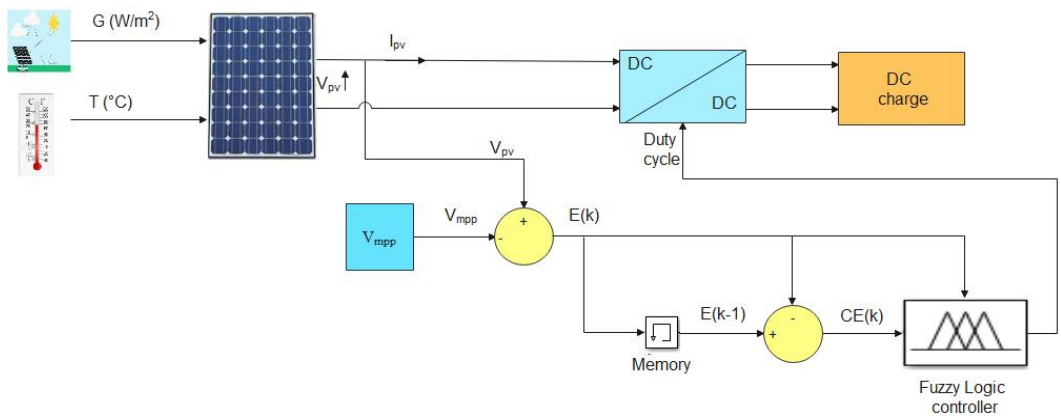

Figure 2. FL MPPT solar system synoptic diagram

The variable Vmpp denotes the voltage at the MPP, while V(k) represents the instantaneous voltage of the PV array measured at sample time k. The difference between V(k) and Vmpp at sampling time k is denoted by E(k), and the rate of change of this difference is denoted by CE(k). The output variable is denoted by duty cycle D. Once the inputs have undergone the process of fuzzification, they are subsequently transmitted to the deduction unit. Following this, the rules are applied, and the variables then proceed to the

defuzzification stage. The controller then generates a true numeric number for duty cycle D [14]. The membership functions for the input variables E and CE are shown in Figures 3 and 4, while the membership function for the duty cycle D as the output is shown in Figure 5.

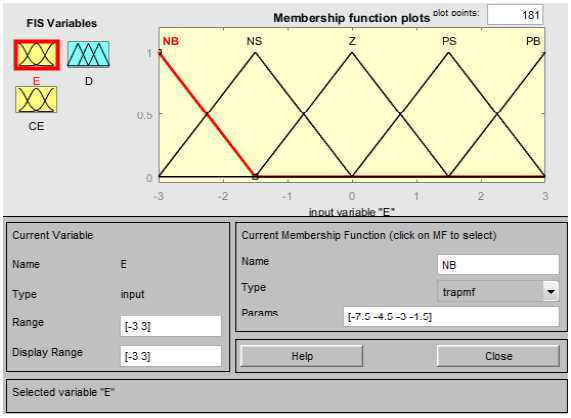

Figure 3. Error membership function for FL MPPT

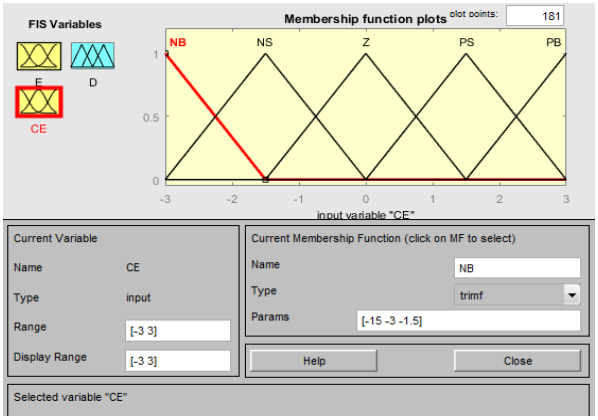

Figure 4. Change of error membership function for FL MPPT

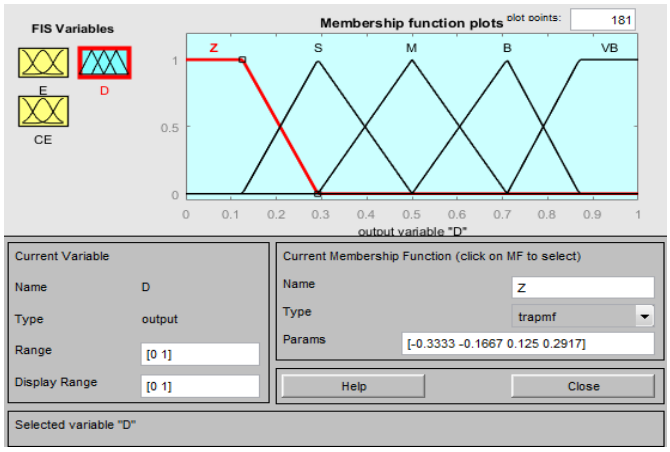

Figure 5. Duty cycle MEMBERSHIP function for FL MPPT

2.3. The hybrid artificial neural network-fuzzy maximum power point tracking strategy

The ANN-fuzzy strategy employs a combination of FL and ANNs. This study suggests an enhanced hybrid method for pursuing the MPP of a PV panel. An ANN is a computational system composed of multiple artificial neurons, which can be analogized to biological neurons due to their similar characteristics as interconnected, elementary processors. Numerous synaptic connections interconnect these neurons, facilitating the transmission of electrical impulses. Every individual neuron possesses numerous connections that facilitate the transmission of incoming information, while only a single connection is responsible for transmitting outgoing information. Neural networks demonstrate exceptional proficiency in the domains of learning and pattern recognition. Recent studies have revealed that ANNs possess significant capabilities for addressing intricate challenges related to data processing and interpretation. ANNs are considered a suitable choice for applications related to PV systems, specifically for the purpose of monitoring the MPP of a PV system. The network can be described as a multi-layer feed-forward neuron system that takes into consideration variations in irradiance and temperature (refer to Figure 6). The architecture of the multilayer neural network comprises three distinct components. The input layer consists of a pair of neurons, which receive data pertaining to the intensity of the sun and the temperature. The determination of the ten neurons in the hidden layer was based on the application of the empirical rule. This rule suggests initially selecting a large number of neurons and subsequently reducing them until a more stable network with enhanced output accuracy is achieved. The output layer is comprised of a solitary neuron, distinguished by its MPP that aligns with its maximum voltage (see Figure 6).

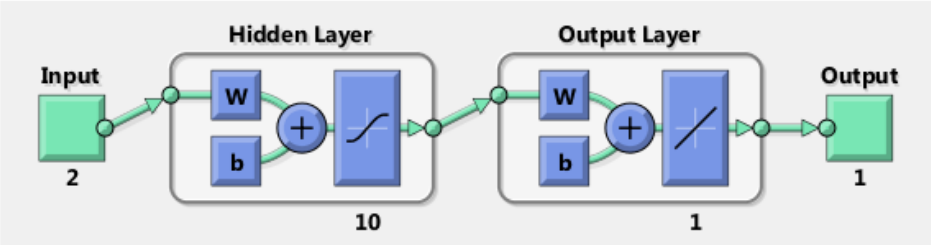

Figure 6. Architecture of the ANN

It is important to point out that the implementation of this structure was the culmination of a number of different efforts to enhance the precision of the ANN. The acquisition of data for training the ANN controller is accomplished through concise MATLAB code generation, facilitating the completion of the learning process. The dataset encompasses both the input variables, namely irradiance and temperature, as well as the output target variable, denoted as MPP voltage (Vmpp). The MATLAB workspace contains all the necessary data for training in offline mode, which can be accessed after executing the MATLAB programme. In order to enhance the precision of predictions, it is imperative that the datasets employed for training neural networks encompass a substantial collection of measurements. There are multiple methods through which training can be conducted. In this study, the Levenberg-Marquardt (LM) method is employed for training the ANN. The LM algorithm has been found to be the optimal training function for accurately tracking the MPPT of the PV array, irrespective of varying weather conditions such as irradiation and temperature.

To account for a diverse array of circumstances in different geographical areas worldwide, the temperature (T) ranges from 0 °C to 55 °C, displaying stochastic fluctuations with varying increments. In a similar vein, the solar irradiation (G) exhibits a range spanning from 100 W/m^2 to 1000 W/m^2, encompassing a diverse spectrum of insolation levels that encompass low, medium, and high intensities. The neural networks were trained (in offline mode) using this dataset. Seventy percent went towards training, 15% towards testing, and 15% towards validation. The results of each training session are rigorously evaluated, and the resulting ANN models are routinely updated to ensure accuracy and stability. Convergence is a critical performance metric that plays a significant role in assessing the operational efficiency of networks. Validation data is used to monitor the performance of models. If the performance of the networks is consistent on both the test and validation data, it can be deduced that the system possesses the ability to precisely produce the most suitable voltage when prompted by the inputs (G, T). Upon completion of the ANN training process and the determination of neuron weights, the resulting output is now inherently linked to the MPP voltage (Vmpp) for any given values of temperature (T) and irradiance (G) when utilised as inputs for the ANN.

The value of Vmpp is commonly recognised as a benchmark that the voltage output of a PV module should conform to in order to attain the most efficient power point across various climate conditions. The FL regulator is involved in this effort since it is necessary for its completion. The goal is to generate a duty cycle that minimises the discrepancy between the PV module's measured output voltage at sampling time k and Vmpp. To maintain the PV module's MPP under all situations (irradiance and temperature), a PWM generator controls the DC-DC boost converter's IGBT switch. Figure 7 shows a PV system that uses ANN-fuzzy MPPT.

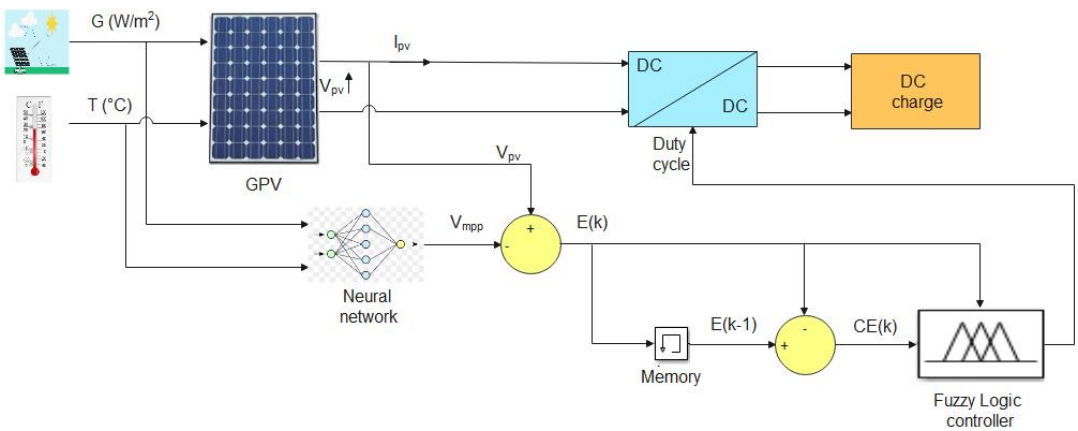

Figure 7. Solar system synoptic illustration utilising the proposed ANN-fuzzy MPPT method

The duty cycle D is the final output of our suggested technique, which takes in the error E(k) and the change in the error CE(k) as inputs to the FL controller. The error E(k) and its variance CE(k) are computed using (1) and (2) from the prior section. Figures 8 and 9 depict the membership functions for the E and CE inputs, whereas Figure 10 depicts the membership function for the duty cycle D output. The FL controller becomes more complicated and expensive as the number of rules increases, but it also gets more accurate while operating but with less speed. The ideal fuzzy system is one with great accuracy, minimal rules, and a low cost. Hence, through the reduction of rules, it is possible to mitigate the expenses associated with the FL controller while simultaneously enhancing the feasibility of implementing this technology [26].

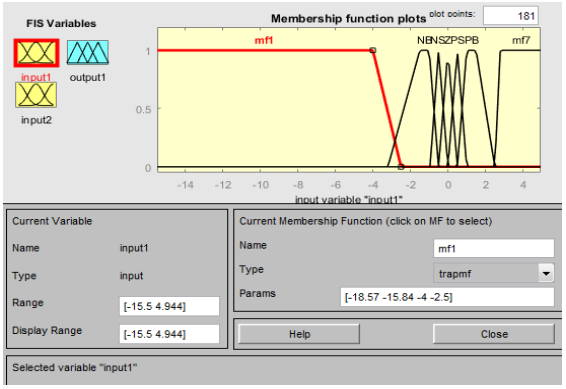

Figure 8. Error membership function for ANN-fuzzy MPPT

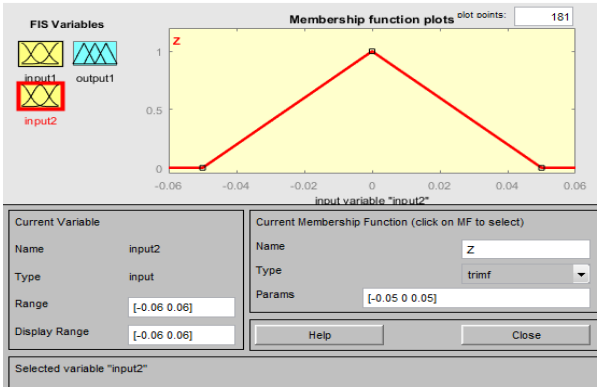

Figure 9. Change of error membership function for ANN-fuzzy MPPT

In contrast to previous research [17], [19], [21], [23], which identified 25 fuzzy rules, as well as other studies [18] that employed 49 rules, the current approach presents an optimised method utilising a mere seven rules. This streamlined approach significantly enhances the usability of the FL controller, as demonstrated in Table 2. By minimising the overall number of rules in our suggested strategy, we want to make the MPPT technology more economically viable and practical for real-time execution.

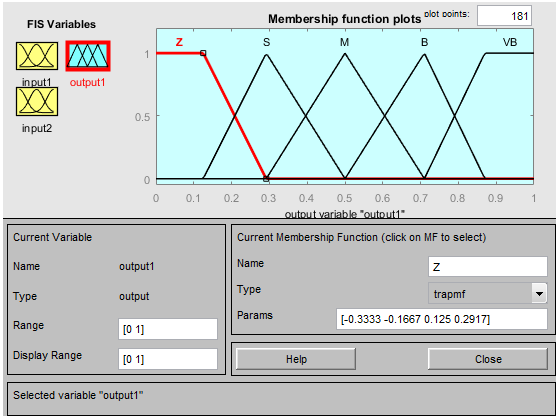

Figure 10. Duty cycle membership function for ANN-fuzzy MPPT

Table 2. Rules for the ANN-fuzzy MPPT controller

CE \ E	Mf1	NB	NS	Z	PS	PB	Mf7
Z	Z	Z	S	M	B	VB	VB

*Mf1: the first membership function, Mf7: the seventh membership function

The objective of this study is to evaluate the performance of the P&O, FL, and ANN-fuzzy methods in the context of low irradiation levels. The significance of this case study becomes evident primarily during the early morning hours, characterised by the gradual increase in sunlight intensity as the sun rises, or on days with cloud cover, which results in relatively lower sunlight intensity. Despite the relatively low levels of

solar energy during these periods, it remains imperative to explore strategies for effectively utilising and harnessing solar radiation to generate electrical power. The primary motivation behind undertaking this study was the observation that a majority of the existing research papers on monitoring MPPT systems utilising FL technology [15]–[33] (primarily focused on testing these systems under conditions of high and medium solar radiation [18], [20], [29], [32]) However, there is a scarcity of studies that investigate the performance of MPPT techniques under relatively low levels of solar illumination [24].

Further, after putting the FL technique described in the previous section into action, it was found that it didn't track the MPP with the level of accuracy needed under the current conditions (low irradiation). In order to rectify this limitation within the FL-based control system, a hybrid approach incorporating ANNs and FL was devised, as outlined in the preceding section. Furthermore, the development of this hybrid technology involved a reduced set of fuzzy rules, specifically seven rules. This reduction in rules not only contributes to a decrease in the price of the console but also enhances the flexibility, ease, and efficiency of implementing real-time strategies [26].

In the process of designing the hybrid control unit ANN-fuzzy, our objective was to ensure its efficacy across various climatic conditions, encompassing scenarios involving rapid fluctuations in solar radiation levels and temperature [26]. The present study aims to substantiate the effectiveness of this method, specifically in situations where the PV system experiences sudden and unforeseen changes in low irradiation levels. The operation of pursuing the MPP is modelled using the MATLAB/Simulink simulation tool. The recommended MPPT controllers are used in the simulation to assess their performance under different low-insolation levels. This process is deemed suitable for evaluating the effectiveness of the different MPPT techniques.

3. RESULTS AND DISCUSSION

Using the simulation tool MATLAB/Simulink, we model the process of pursuing the MPP using the recommended MPPT controllers when they are exposed to a variety of insolation levels. It is an appropriate method for comparing the efficacy of the various MPPT methods included in this study. Figure 11 shows the whole PV installation. The purpose of the examination of the different methods mentioned above is to select the best technique among them. The PV system consists of a PV generator, namely a Soltech 1STH-215-P PV module, and a step-up chopper with a commutation frequency of 15 kHz. The input capacitor (300 uF), input inductance (45 uH), and output capacitor (300 uF) make up the boost converter. The output load is a 20 ohm resistive load. In order to pilot the boost converter, the aforementioned MPPT methods are implemented. Table 3 details the specifications of the Soltech 1STH-215-P module.

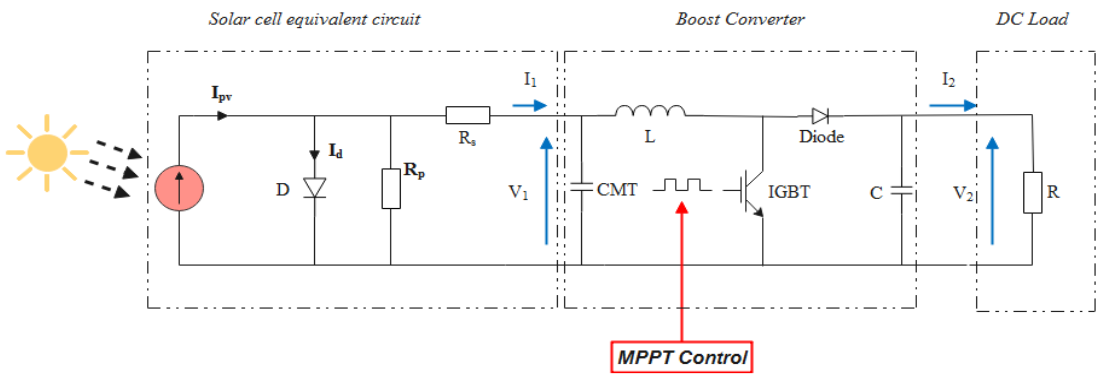

Figure 11. PV system

Table 3. Specs for the solar panel

Parameters	Values
Maximum power (P_{mpp})	213.15 W
Optimal voltage (V_{mpp})	29 V
Optimal current (I_{mpp})	7.35 A
Open circuit voltage (V_{OC})	36.3 V
Short circuit current (I_{SC})	7.84 A
Temperature coefficient of (V_{OC})	-0.36099%/°C
Temperature coefficient of (I_{SC})	0.102%/°C

3.1. Results obtained with low sunlight changes

A profile of insolation that was implemented in the simulation is shown in Figure 12. At first, between t=0 and 0.5 s, the irradiance is 250 W/m^2. In this study, we maintain a steady temperature (T=25 °C) while introducing sudden shifts in irradiance at 0.5 s, 1 s, and 1.5 s. The illumination ranges from 250 W/m^2 to 400 W/m^2, then from 400 W/m^2 to 300 W/m^2, and lastly from 300 W/m^2 to 450 W/m^2. Figure 13 displays the I-V and PV characteristics of the PV array type Soltech 1STH-215-P and their theoretical values of V_{mpp} and P_{mpp}, which represent the voltage and power at the maximal power point obtained under low irradiation levels.

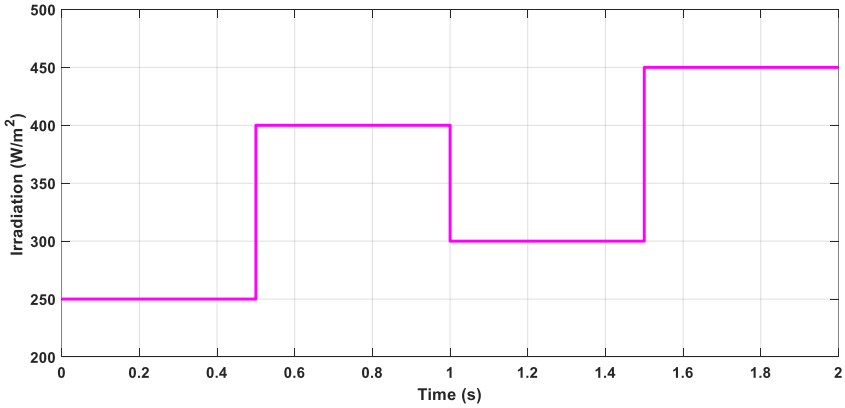

Figure 12. The level of radiation exposure that was utilised for the simulation

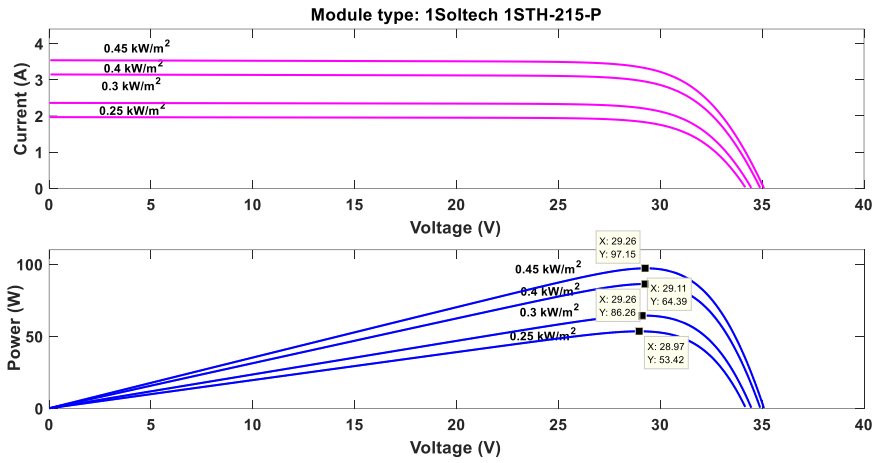

Figure 13. I-V and P-V characteristics of the PV module Soltech 1STH-215-P under low irradiation levels

Figure 14 shows the PV system's output power and the dynamic performance of the P&O, FL, and suggested ANN-fuzzy MPPT techniques when there is not a lot of sunlight. This figure makes it very evident that the MPPT-based FL does not follow or come close to the MPP produced by the solar generator over the whole simulation time. On the other hand, the P&O MPPT technique follows the MPP technique reasonably well, but it appears in zooms 1-4 that P&O has some shortcomings, as illustrated in the zoom figures, such as slow convergence and a large amount of oscillation in the transient regime, which resulted in a PV system losing a lot of energy. The zoom figures (zoom 1-zoom 4) show that the proposed ANN-fuzzy MPPT had a quick response time, that their curve is smooth, and that it does not exhibit a significant amount of oscillation, as is the case with the P&O method. The recommended ANN-fuzzy MPPT tactic tracks the MPP well and efficiently.

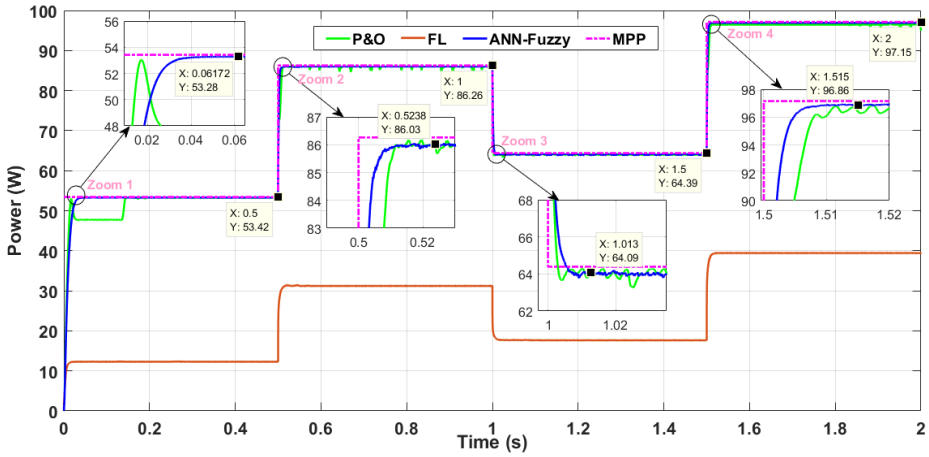

Figure 14. The output power of the PV system and the dynamic performance of strategies P&O, FL, and the recommended ANN-fuzzy MPPT technique under low levels of solar illumination

Figure 15 illustrates the extracted power from the PV system as well as the steady-state performance of the P&O, FL, and proposed ANN-fuzzy MPPT approach when there is little solar illumination. In a steady state regime, it is true that P&O is relatively close to the predicted value of the MPP; however, the P&O MPPT method causes a huge oscillation around the operational point in this case, which is evidently visible in the zoom figures (Zoom 5-Zoom 8). In contrast to the P&O method, the proposed ANN-fuzzy MPPT technique does not cause a large amount of oscillation around the operational point in a steady-state regime and presents good accuracy in tracking the MPP. In effect, from Figure 15 and Zoom 5-Zoom 8, we can observe that the power curve obtained by using the ANN-fuzzy MPPT technique as a unit of control of the PV system displayed above (see Figure 11) is smooth and very close to the predicted value of the MPP in each level of irradiation presented in the profile of the irradiation simulation (see Figure 12).

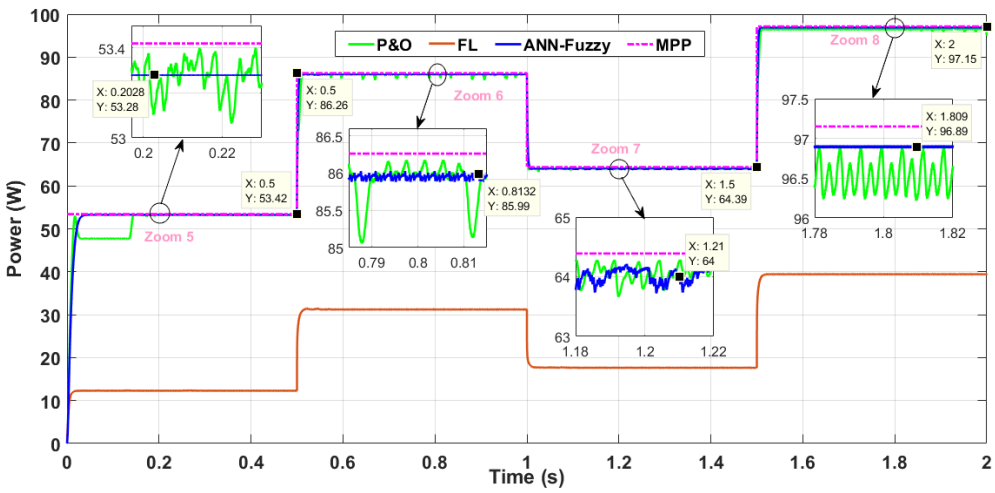

Figure 15. The PV system's output power and steady-state performance using P&O, FL, and the proposed ANN-fuzzy MPPT strategy under low levels of solar light

4. CONCLUSION

The focus of this study is to determine how solar power systems track their own MPP in low-light conditions. P&O, FL, and the proposed ANN-fuzzy strategy were used to develop the MPPT controllers mentioned in this research. Next, using a simulated PV system with low irradiance levels, they are evaluated in the Matlab/Simulink environment. After that, proposed controllers are assessed through a comparison analysis that takes into account determining and influencing features including precision, convergence speed,

effectiveness, and steady-state ripples around the operating point. The findings obtained from running the simulation illustrate the efficacy of the proposed ANN-fuzzy MPPT tracker during transitory and steady states, as the proposed method outperforms the P&O MPPT controller in terms of rapid and precise tracking of the MPP at low irradiance levels, which change abruptly. Moreover, the suggested approach enables addressing the limitations of the FL based MPPT method. Based on our fin dings, we can conclude that the suggested ANN-fuzzy MPPT approach has good accuracy and efficiency, rapid convergence, and a smooth transition when the irradiation changes from one level to another without triggering oscillations around the operating point.

REFERENCES

[1] N. Aouchiche, "Conception d'une commande MPPT optimale à base d'intelligence artificielle d'un système photovoltaïque," Ph.D. dissertation, Dept. Elect. Eng, University of Technology of Belfort-Montbéliard., Belfort, France, 2020.

[2] E. Bellini, "La capacité solaire mondiale pourrait atteindre 350,6 GW en 2023, selon TrendForce." [Online]. Available: https://www.pv-magazine.fr/2023/02/16/la-capacite-solaire-mondiale-pourrait-atteindre-3506-gw-en-2023-selon-trendforce/, (accessed: March 28, 2023).

[3] V. A. M. Lopez, U. Žindžiūtė, H. Ziar, M. Zeman, and O. Isabella, "Study on the Effect of Irradiance Variability on the Efficiency of the Perturb-and-Observe Maximum Power Point Tracking Algorithm," *Energies*, vol. 15, no. 20, p. 7562, Oct. 2022, doi: 10.3390/en15207562.

[4] T. W. Brown, T. Bischof-Niemz, K. Blok, C. Breyer, H. Lund, and B. V Mathiesen, "Response to 'Burden of proof: A comprehensive review of the feasibility of 100% renewable-electricity systems,'' *Renewable and Sustainable Energy Reviews*, vol. 92, pp. 834–847, Sep. 2018, doi: 10.1016/j.rser.2018.04.113.

[5] B. P. Singh, S. K. Goyal, S. A. Siddiqui, A. Saraswat, and R. Ucheniya, "Intersection Point Determination Method: A novel MPPT approach for sudden and fast changing environmental conditions," *Renewable Energy*, vol. 200, pp. 614–632, Nov. 2022, doi: 10.1016/j.renene.2022.09.056.

[6] L. Thangamuthu, J. R. Albert, K. Chinnanan, and B. Gnanavel, "Design and development of extract maximum power from single-double diode PV model for different environmental condition using BAT optimization algorithm," *Journal of Intelligent & Fuzzy Systems*, vol. 43, no. 1, pp. 1091–1102, Jun. 2022, doi: 10.3233/jifs-213241.

[7] A. S. Oshaba, E. S. Ali, and S. M. A. Elazim, "MPPT control design of PV system supplied SRM using BAT search algorithm," *Sustainable Energy, Grids and Networks*, vol. 2, pp. 51–60, Jun. 2015, doi: 10.1016/j.segan.2015.04.002.

[8] S. Issaadi, W. Issaadi, and A. Khireddine, "New intelligent control strategy by robust neural network algorithm for real time detection of an optimized maximum power tracking control in photovoltaic systems," *Energy*, vol. 187, p. 115881, Nov. 2019, doi: 10.1016/j.energy.2019.115881.

[9] M. L. Katche, A. B. Makokha, S. O. Zachary, and M. S. Adaramola, "A Comprehensive Review of Maximum Power Point Tracking (MPPT) Techniques Used in Solar PV Systems," *Energies*, vol. 16, no. 5, p. 2206, Feb. 2023, doi: 10.3390/en16052206.

[10] S. Manna *et al.*, "Design and implementation of a new adaptive MPPT controller for solar PV systems," *Energy Reports*, vol. 9, pp. 1818–1829, Dec. 2023, doi: 10.1016/j.egyr.2022.12.152.

[11] M. Sarvi and A. Azadian, "A comprehensive review and classified comparison of MPPT algorithms in PV systems," *Energy Systems*, vol. 13, no. 2, pp. 281–320, Mar. 2021, doi: 10.1007/s12667-021-00427-x.

[12] J. Dadkhah and M. Niroomand, "Optimization Methods of MPPT Parameters for PV Systems: Review, Classification, and Comparison," *Journal of Modern Power Systems and Clean Energy*, vol. 9, no. 2, pp. 225–236, 2021, doi: 10.35833/mpce.2019.000379.

[13] S. Messalti, A. Harrag, and A. Loukriz, "A new variable step size neural networks MPPT controller: Review, simulation and hardware implementation," *Renewable and Sustainable Energy Reviews*, vol. 68, pp. 221–233, Feb. 2017, doi: 10.1016/j.rser.2016.09.131.

[14] M. H. Parvaneh and P. G. Khorasani, "A new hybrid method based on Fuzzy Logic for maximum power point tracking of Photovoltaic Systems," *Energy Reports*, vol. 6, pp. 1619–1632, Nov. 2020, doi: 10.1016/j.egyr.2020.06.010.

[15] S. Slamet, E. Rijanto, A. Nugroho, and R. A. Ghani, "A robust maximum power point tracking control for PV panel using adaptive PI controller based on fuzzy logic," *TELKOMNIKA (Telecommunication Computing Electronics and Control)*, vol. 18, no. 6, p. 2999, Dec. 2020, doi: 10.12928/telkomnika.v18i6.17271.

[16] H. Abbes, H. Abid, K. Loukil, M. Abid, and A. Toumi, "Fuzzy-based MPPT algorithm implementation on FPGA chip for multi-channel photovoltaic system," *International Journal of Reconfigurable and Embedded Systems (IJRES)*, vol. 11, no. 1, pp. 49-58, Mar. 2022, doi: 10.11591/ijres.v11.i1.pp49-58.

[17] K. K. Rout, D. P. Mishra, S. Mishra, G. T. Rishitha, and S. R. Salkuti, "Application of fuzzy logic technique to track maximum power point in photovoltaic systems," *Indonesian Journal of Electrical Engineering and Computer Science*, vol. 29, no. 1, pp. 101-109, Jan. 2022, doi: 10.11591/ijeecs.v29.i1.pp101-109.

[18] D. Toumi *et al.*, "Maximum power point tracking of photovoltaic array using fuzzy logic control," *International Journal of Power Electronics and Drive Systems (IJPEDS)*, vol. 13, no. 4, pp. 2440-2449, Dec. 2022, doi: 10.11591/ijpeds.v13.i4.pp2440-2449.

[19] A. Ibnelouad, A. Elkari, H. Ayad, and M. Mjahed, "A neuro-fuzzy approach for tracking maximum power point of photovoltaic solar system," *International Journal of Power Electronics and Drive Systems (IJPEDS)*, vol. 12, no. 2, pp. 1252-1264, Jun. 2021, doi: 10.11591/ijpeds.v12.i2.pp1252-1264.

[20] M. A. Abo-Sennah, M. A. El-Dabah, and A. E.-B. Mansour, "Maximum power point tracking techniques for photovoltaic systems: a comparative study," *International Journal of Electrical and Computer Engineering (IJECE)*, vol. 11, no. 1, pp. 57-73, Feb. 2021, doi: 10.11591/ijece.v11i1.pp57-73.

[21] K. H. Chalok, M. F. N. Tajuddin, T. S. Babu, S. Md Ayob, and T. Sutikno, "Optimal extraction of photovoltaic energy using fuzzy logic control for maximum power point tracking technique," *International Journal of Power Electronics and Drive Systems (IJPEDS)*, vol. 11, no. 3, pp. 1628-1639, Sep. 2020, doi: 10.11591/ijpeds.v11.i3.pp1628-1639.

[22] L. Farah, A. Haddouche, and A. Haddouche, "Comparison between proposed fuzzy logic and ANFIS for MPPT control for photovoltaic system," *International Journal of Power Electronics and Drive Systems (IJPEDS)*, vol. 11, no. 2, pp. 1065-1073, Jun. 2020, doi: 10.11591/ijpeds.v11.i2.pp1065-1073.

[23] M. H. Azmi, S. Z. M. Noor, and S. Musa, "Fuzzy logic control based maximum power point tracking technique in standalone photovoltaic system," *International Journal of Power Electronics and Drive Systems (IJPEDS)*, vol. 14, no. 2, pp. 1110-1120,

Jun. 2023, doi: 10.11591/ijpeds.v14.i2.pp1110-1120.
[24] V. Jately, B. Azzopardi, J. Joshi, B. Venkateswaran V, A. Sharma, and S. Arora, "Experimental Analysis of hill-climbing MPPT algorithms under low irradiance levels," *Renewable and Sustainable Energy Reviews*, vol. 150, p. 111467, Oct. 2021, doi: 10.1016/j.rser.2021.111467.
[25] M. Zerouali, A. El Ougli, and B. Tidhaf, "A robust fuzzy logic PI controller for solar system battery charging," *International Journal of Power Electronics and Drive Systems (IJPEDS)*, vol. 14, no. 1, pp. 384-394, Mar. 2023, doi: 10.11591/ijpeds.v14.i1.pp384-394.
[26] L. Hichem, O. Amar, and M. Leila, "Optimized ANN-fuzzy MPPT controller for a stand-alone PV system under fast-changing atmospheric conditions," *Bulletin of Electrical Engineering and Informatics*, vol. 12, no. 4, pp. 1960–1981, Aug. 2023, doi: 10.11591/eei.v12i4.5099.
[27] B. Talbi, F. Krim, T. Rekioua, A. Laib, and H. Feroura, "Design and hardware validation of modified P&O algorithm by fuzzy logic approach based on model predictive control for MPPT of PV systems," *Journal of Renewable and Sustainable Energy*, vol. 9, no. 4, Jul. 2017, doi: 10.1063/1.4999961.
[28] C. Napole, M. Derbeli, and O. Barambones, "Fuzzy Logic Approach for Maximum Power Point Tracking Implemented in a Real Time Photovoltaic System," *Applied Sciences*, vol. 11, no. 13, p. 5927, Jun. 2021, doi: 10.3390/app11135927.
[29] D. Remoaldo and I. Jesus, "Analysis of a Traditional and a Fuzzy Logic Enhanced Perturb and Observe Algorithm for the MPPT of a Photovoltaic System," *Algorithms*, vol. 14, no. 1, p. 24, Jan. 2021, doi: 10.3390/a14010024.
[30] M. Kumar, S. R. Kapoor, R. Nagar, and A. Verma, "Comparison between IC and Fuzzy Logic MPPT Algorithm Based Solar PV System using Boost Converter," *International Journal of Advanced Research in Electrical, Electronics and Instrumentation Engineering*, vol. 04, no. 06, pp. 4927–4939, Jun. 2015, doi: 10.15662/ijareeie.2015.0406007.
[31] T. Ramalu, M. M. Radzi, M. M.Zainuri, N. A. Wahab, and R. A. Rahman, "A Photovoltaic-Based SEPIC Converter with Dual-Fuzzy Maximum Power Point Tracking for Optimal Buck and Boost Operations," *Energies*, vol. 9, no. 8, p. 604, Jul. 2016, doi: 10.3390/en9080604.
[32] U. Yilmaz, A. Kircay, and S. Borekci, "PV system fuzzy logic MPPT method and PI control as a charge controller," *Renewable and Sustainable Energy Reviews*, vol. 81, pp. 994–1001, Jan. 2018, doi: 10.1016/j.rser.2017.08.048.
[33] W. Na, P. Chen, and J. Kim, "An Improvement of a Fuzzy Logic-Controlled Maximum Power Point Tracking Algorithm for Photovoltic Applications," *Applied Sciences*, vol. 7, no. 4, p. 326, Mar. 2017, doi: 10.3390/app7040326.

BIOGRAPHIES OF AUTHORS

Louki Hichem received a Bachelor of Science in engineering in 2015 from the Preparatory School for Science and Technology in Annaba, Algeria, and a Master of Science with an Engineering Degree in Electrical Engineering from the National Polytechnic School of Constantine, Algeria, in 2018. Currently, he is pursuing a Ph.D. in electrical engineering from the Department of Electrical Engineering at BADJI Mokhtar-Annaba University in Algeria. His research interests include renewable energy system modeling and control. He can be contacted at email: hichem.louki@univ-annaba.org.

Merabet Leila received Engineer (electrical engineering) and Magister (electrical control) degrees from Annaba University in 1993 and 2001 respectively. She had her Ph.D. degree in 2015 and the "Habilitation to supervise research" degree on electrical engineering in 2019. She is working as senior researcher "A". Her research interest includes renewable energy systems, power quality, harmonics, control, PV system, and artificial neuron networks. She authored and co-authored many papers in academic journals, conferences and proceedings. She can be contacted at email: lei_elt@yahoo.fr.

Omeiri Amar was born in Skikda, Algeria, in 1958. He received the Engineer degree from Annaba University in 1983, Master degree of Science by research from Strathclyde University, UK in 1986 and the Ph.D. degree in 2007 from Annaba University, Algeria. Since 1987 he has been a Lecturer at Annaba University in the Electrical Engineering department. His current research field includes active power filters, renewable energies, power electronics, AC, and DC drives. He can be contacted at email: omeiri.amar@gmail.com.